INTERNSHIP TASK REPORT

Task 2: Automobile Systems and Electric Vehicle Technology
Submitted by: Sumit Kumar
Department: Electrical Engineering
Internship: MainCrafts Tech.
Internship Date: February 12, 2026

Analysis of Electric Vehicle Powertrain and Control Systems

1. Introduction to EV Powertrain Architecture

The powertrain is the functional core of an Electric Vehicle (EV), responsible for the conversion of stored electrochemical energy into mechanical torque at the wheels. Unlike traditional internal combustion engines, the EV powertrain is characterized by high energy efficiency (typically >85%) and instantaneous torque delivery.

Primary Sub-systems:

- **Energy Storage System (ESS):** Usually a high-voltage Lithium-ion battery pack.
- **Power Electronic Converter (Inverter):** The bridge between DC storage and AC propulsion. It uses Pulse Width Modulation (PWM) to control the frequency and amplitude of the voltage supplied to the motor.
- **Electric Motor:** The primary traction machine.
- **Transmission:** A fixed-ratio reduction gear (usually 9:1 or 10:1) because electric motors provide a wide constant-power speed range, eliminating the need for multi-speed gearboxes.

---

2. Comparative Analysis of Traction Motors

In my study of EV propulsion, the selection of the motor is the most critical design decision. It impacts the vehicle's range, weight, and thermal management requirements.

Motor Comparison Table

Parameter	Permanent Magnet Synchronous (PMSM)	Induction Motor (IM)	Brushless DC (BLDC)
Power Density	Very High	Medium	High
Efficiency	94% - 97%	85% - 92%	90% - 95%

Cost	High (Rare-earth magnets)	Low (Copper/Aluminum)	Moderate
Reliability	High	Excellent (Rugged)	High
Control Complexity	High (Vector Control)	High (V/f or FOC)	Simple (Six-step)

- **PMSM:** My analysis shows this is the industry standard for passenger cars (e.g., Tesla Model 3, Hyundai Ioniq) due to its superior efficiency-to-weight ratio.
- **Induction Motor:** I found these are preferred for high-performance applications where high-speed cruising is common, as they lack "cogging torque" and magnetic drag at high RPMs.

[Image comparing PMSM and Induction motor internal construction]

---

3. Battery Management System (BMS) Engineering

As an electrical engineer, I recognize that the BMS is the "Operating System" of the battery. Without a robust BMS, Lithium-ion cells are prone to degradation and safety hazards.

Key Technical Functions:

1. **SOC & SOH Estimation:** Using algorithms like *Coulomb Counting* or *Extended Kalman Filters* to estimate the State of Charge (SOC) and State of Health (SOH).
2. **Cell Balancing:** To maximize capacity, the BMS bleeds off excess energy from "strong" cells or redistributes it to "weak" cells during charging.
3. **Thermal Protection:** Monitoring thermistors placed throughout the pack. If a cell exceeds 60°C, the BMS triggers a derating of power or activates the cooling loop to prevent thermal runaway.

---

5. Conclusion

The shift to EV technology represents a move toward high-precision power electronics and advanced control theory. While the battery remains the most expensive component, the integration of high-efficiency PMSM motors and intelligent BMS software is what defines the modern driving experience.

---

6. References

1. *Husain, I. (2021). Electric and Hybrid Vehicles: Design Fundamentals.*
2. *Plett, G. L. (2015). Battery Management Systems, Volume I: Battery Modeling.*
3. *Technical Specifications Data: Tata Motors Ziptron Platform.*
4. *IEEE Exploration: Recent Trends in EV Powertrain Optimization.*

Figure 1.0: EV Technical Diagrams

EV Powertrain Explanation

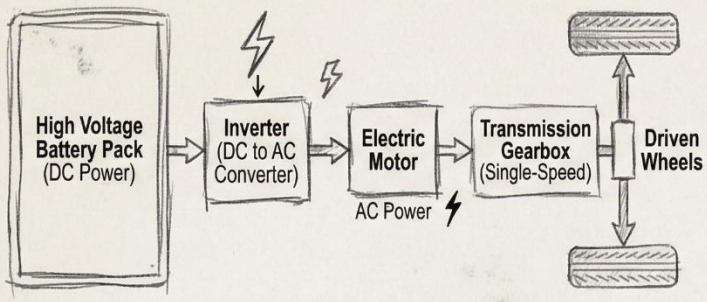

Motor Comparison: Rotor Cross-Sections

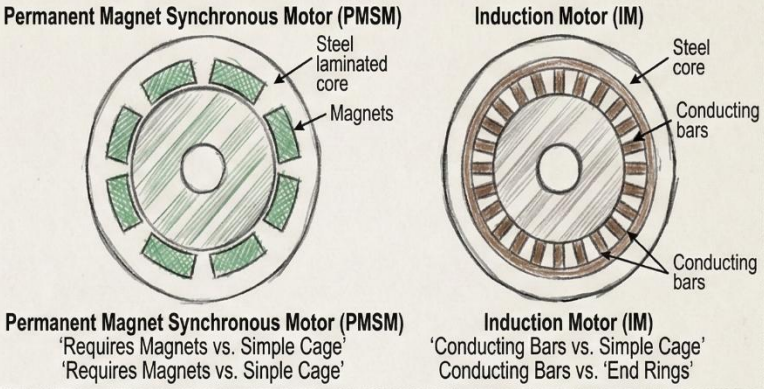

BMS (Battery Management System) Details: Architecture and Functions.

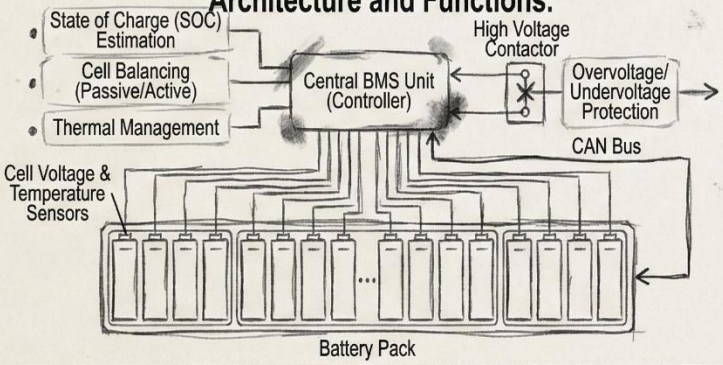

Nexon EV Case Study Context.

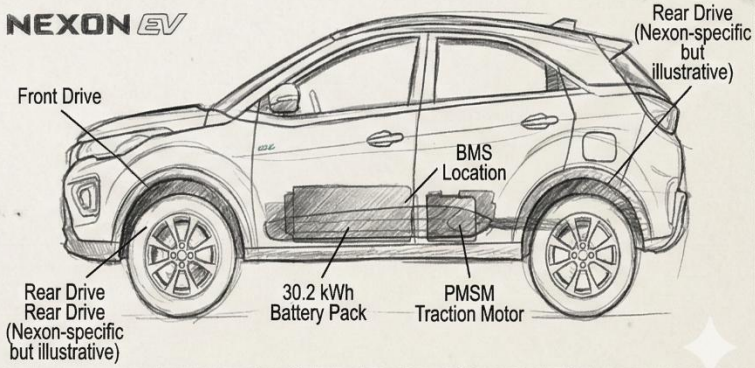

Student: [Insert Name]

Date: [Insert Date]